SPINA Novo mesto d.o.o.
Resslova 7 a
8000 Novo mesto
Slovenija
+386 7 373 05 16
spina@spina.si
www.spina.si

naziv načrta: **2.1_NAČRT S PODROČJA GRADBENIŠTVA**

podpodročje: **GRADBENE KONSTRUKCIJE**

za objekt: **05 - MALE GARAŽE**

INVESTITOR		
ime in priimek ali naziv družbe		**DARS D.D.**
naslov ali poslovni naslov družbe		**ULICA XIV. DIVIZIJE 4, 3000 CELJE**
PODATKI O GRADNJI		
naziv gradnje		**OBNOVA CESTNINSKE POSTAJE IN IZPOSTAVE DOB**
VRSTE GRADNJE	☐	**NOVOGRADNJA - NOVOZGRAJEN OBJEKT**
označiti vse ustrezne vrste gradnje	☑	**NOVOGRADNJA - PRIZIDAVA**
	☑	**REKONSTRUKCIJA**
	☐	**SPREMEMBA NAMEMBNOSTI**
	☐	**ODSTRANITEV CELOTNEGA OBJEKTA**
	☐	**LEGALIZACIJA**
	☐	**MANJŠA REKONSTRUKCIJA**
PODATKI O PROJEKTNI DOKUMENTACIJI		
vrsta dokumentacije		**PROJEKT ZA IZVEDBO**
številka projekta		**KGIP 2024/011**
PODATKI O NAČRTU		
strokovno področje načrta		**NAČRT S PODROČJA GRADBENIŠTVA**
naziv načrta		**STATIČNI PRERAČUN, ARMATURNI NAČRTI, NAČRT JK**
številka načrta		**102 / 2024_05**
datum izdelave		**MAJ 2025**
datum izdelave po recenziji		**OKTOBER 2025**
PODATKI O PROJEKTANTU NAČRTA		
projektant načrta (naziv družbe)		**SPINA NOVO MESTO D.O.O.**
naslov		**RESSLOVA ULICA 7A**
odgovorna oseba projektanta načrta		
podpis odgovorne osebe projektanta načrta		
PODATKI O IZDELOVALCU NAČRTA		
ime in priimek pooblaščenega arhitekta, pooblaščenega inženirja		
identifikacijska številka		
podpis pooblaščenega arhitekta, pooblaščenega inženirja		
PODATKI O VODJI PROJEKTIRANJA		
VODJA PROJEKTIRANJA		
identifikacijska številka		
podpis vodje projektiranja		

2.2 KAZALO VSEBINE NAČRTA GRADBENE KONSTRUKCIJE

2.1 NASLOVNA STRAN

2.2 KAZALO VSEBINE NAČRTA GRADBENE KONSTRUKCIJE

2.3 KAZALO VSEBINE PROJEKTA

2.4 IZJAVA PROJEKTANTA NAČRTA

2.5 TEHNIČNO POROČILO

2.6 RISBE

2.3 KAZALO VSEBINE PROJEKTA

KAZALO NAČRTOV

PZI

naziv načrta	številka načrta
1_NAČRT S PODROČJA ARHITEKTURE	**2024/011**
0_Zbirni načrt	2024/011/PZI/0
1_O1 Načrt arhitekture za objekt O1 (Upravna stavba)	2024/011/PZI/1_O1
1_O2.1 Načrt arhitekture za objekt O2.1 (Nadstrešnica za osebna vozila)	2024/011/PZI/1_O2.1
1_O2.2 Načrt arhitekture za objekt O2.2 (Nadstrešnica za osebna vozila)	2024/011/PZI/1_O2.2
1_O3 Načrt arhitekture za objekt O3 (Nadstrešnica za osebna vozila)	2024/011/PZI/1_O3
1_O4-7 Načrt arhitekture za objekt O4-7 (O4: Velike Garaže, O5: Male garaže, O6: Prizidava garaže za plužne skupine, O7: Prizidava garaže k O4)	2024/011/PZI/1_O4-7
1_O8 Načrt arhitekture za objekt O8 (Skladišče soli s pralnico)	2024/011/PZI/1_O8
1_O9 Načrt arhitekture za objekt O9 (Nadstrešnica za pregledna vozila)	2024/011/PZI/1_O9
1_O10 Načrt arhitekture za objekt O10 (Lopa za hrambo kosilnic)	2024/011/PZI/1_O10
1_O11 Načrt arhitekture za objekt O10 (Mešalne naprave NaCl + CaCl)	2024/011/PZI/1_O11
1_O12+13 Načrt arhitekture za objekt O12+13 (O12: Zbiralnik za deževnico - podzemni, O13: Ploščad z nadstrešnico za ekološki otok + strojnica za O12)	2024/011/PZI/1_O12+ 13
1_O14 Načrt arhitekture za objekt O14 (Cisterni za plin z AB varovalnim zidom)	2024/011/PZI/1_O14
1_O15 Načrt arhitekture za objekt O15 (Oporni zid)	2024/011/PZI/1_O15
1_EO Načrt arhitekture za EO (Enostavni objekti)	2024/011/PZI/1_EO
1_NNO Načrt NNO (Načrt notranje opreme)	2024/011/PZI/1_NNO
1_O1 Načrt arhitekture za objekt O1-ZUKN (Začasno upravno kontejnersko naselje)	2024/011/PZI/1_O1- ZUKN
2.1_NAČRT S PODROČJA GRADBENIŠTVA, GRADBENE KONSTRUKCIJE	**102/2024**
GK ZA OBJEKT 1 - UPRAVNA STAVBA	102/2024_01
GK ZA OBJEKT 2 - NADSTREŠNICA ZA OSEBNA VOZILA	102/2024_02
GK ZA OBJEKT 3 - NADSTREŠNICA ZA OSEBNA VOZILA	102/2024_03
GK ZA OBJEKT 4 - VELIKE GARAŽE	102/2024_04
GK ZA OBJEKT 5 - MALE GARAŽE	102/2024_05
GK ZA OBJEKT 6 - PRIZIDAVA GARAŽE ZA PLUŽNA VOZILA	102/2024_06
GK ZA OBJEKT 7 - PRIZIDAVA GARAŽE K O4	102/2024_07
GK ZA OBJEKT 8 - SKLADIŠČE SOLI S PRALNICO	102/2024_08
GK ZA OBJEKT 9 - NADSTREŠNICA ZA PREGLEDNA VOZILA	102/2024_09
GK ZA OBJEKT 10 - LOPA ZA HRAMBO KOSILNIC	102/2024_10
GK ZA OBJEKT 11 - MEŠALNE NAPRAVE NACL	102/2024_11
GK ZA OBJEKT 12-13 - ZBIRALNIK ZA DEŽEVNICO + PLOŠČAD	102/2024_12+13
GK ZA OBJEKT 14 - UNP CISTERNA	102/2024_14
GK ZA OBJEKT 15 - OPORNI ZID	102/2024_15
GK ZA OBJEKT 16 - VKOPANA VISTERNA S PRETAKALNO PLOŠČADJO	102/2024_16

2.2_NAČRT S PODROČJA GRADBENIŠTVA, ZUNANJA IN PROMETNA UREDITEV Z ODVODNJAVANJEM	**KGIP 2024/011/2.2**

3_NAČRT S PODROČJA ELEKTROTEHNIKE, TEHNIČNO VAROVANJE	**PR25E034-TV**

3_NAČRT S PODROČJA ELEKTROTEHNIKE, TK + SNVP	**PE02/24-12**
3/I_NAČRT S PODROČJA ELEKTROTEHNIKE, OBJEKT O1+O2+ZU (Upravna stavba, nadstrešnice, zunanja ureditev)	PE02/24-12
3/I_NAČRT S PODROČJA ELEKTROTEHNIKE, OBJEKT 3+9+10+14 - Lopa, nadstrešnici in plinohrami	PE02/24-12
3/I_NAČRT S PODROČJA ELEKTROTEHNIKE, OBJEKT O4 do O7 - Velike in male garaže	PE02/24-12
3/I_NAČRT S PODROČJA ELEKTROTEHNIKE, OBJEKT O8 - Skladišče soli s pralnico	PE02/24-12
3/I_NAČRT S PODROČJA ELEKTROTEHNIKE, OBJEKT O11+O12+O13 - Mešalnica soli, črpališče in nadstrešnica	PE02/24-12

4_NAČRT S PODROČJA STROJNIŠTVA	**D-005/24**
4-NAČRT STROJNIH INŠTALACIJ, UPRAVNI OBJEKT O1	D-005/24/1
4-NAČRT STROJNIH INŠTALACIJ, GARAŽNI OBJEKT Z NADSTREŠNICO	D-005/24/2
4-NAČRT STROJNIH INŠTALACIJ, PRALNICA IN SKLADIŠČE SOLI - O8	D-005/24/3
4-NAČRT STROJNIH INŠTALACIJ, PRALNICA IN SKLADIŠČE SOLI - O12	D-005/24/4
4-NAČRT STROJNIH INŠTALACIJ, MEŠALNE NAPRAVE ZA NACL IN CACL	D-005/24/5
4-NAČRT STROJNIH INŠTALACIJ, PLINSKA CENTRALA	D-005/24/6

6_NAČRT S PODROČJA POŽARNE VARNOSTI	**KGIP 2024/011/6- PZI**

7_NAČRT S PODROČJA GEOTEHNOLOGIJE IN RUDARSTVA; Geološko geomehansko poročilo	**5697-140/2024-01**

8_NAČRT S PODROČJA GEODEZIJE; Goedetski načrt	**KOSTAK d.d.-2024- 132**

11_DRUGI NAČRTI	
VARNOSTNI NAČRT	**01/05/2025**
POPIS DEL S PREDRAČUNOM	

KAZALO ELABORATOV IN ŠTUDIJ
PZI

naziv elaborata, študije	št.
ELABORAT EKSPLOZIJSKE OGROŽENOSTI Z OCENO TVEGANJA ZA AVTOCESTNO BAZO DOB	CPV-30067/2025
TEHNIČNO POROČILO ELABORATA ENERGIJSKE UČINKOVITOSTI STAVB IN ANALIZA OSONČENOSTI	KGIP 2024/011_ure
izkaz energijskih karakteristik prezračevanja stavbe	KGIP 2024/011_ure
ELABORAT ZAŠČITE PRED HRUPOM V STAVBAH	KGIP 2024/011_zz
izkaz energijskih karakteristik prezračevanja stavbe	D-005/24/1
izkaz požarne varnosti	KGIP 2024/011-6pzi
izkaz zaščite pred hrupom	KGIP 2024/011_zz
NAČRT GOSPODARJENJA Z GRADBENIMI ODPADKI	KGIP 2024/011_nggo

SPINA Novo mesto d.o.o.
Resslova 7 a
8000 Novo mesto
Slovenija
+386 7 373 05 16
spina@spina.si
www.spina.si

2.4 IZJAVA PROJEKTANTA NAČRTA IN POOBLAŠČENEGA STROKOVNJAKA, KI JE IZDELAL NAČRT V PZI

PROJEKTANT	
projektant (naziv družbe)	**SPINA NOVO MESTO D.O.O.**
naslov	**RESSLOVA ULICA 7A, 8000 NOVO MESTO**
odgovorna oseba projektanta	

IN POOBLAŠČENI STROKOVNJAK, KI JE IZDELAL NAČRT

IZJAVLJAVA:

da načrt

vrsta dokumentacije	**PZI**
strokovno področje načrta	**GRADBENIŠTVO**
naziv načrta	**05 - MALE GARAŽE**
številka načrta	**102 / 2024_05**
datum izdelave	**MAJ 2025**
datum izdelave po recenziji	**OKTOBER 2025**

upošteva relevantne predpise in druge normativne dokumente ter da so upoštevane ustrezne bistvene in druge zahteve.

pooblaščeni strokovnjak	
identifikacijska številka	
podpis pooblaščenega strokovnjaka	
odgovorna oseba projektanta	
podpis odgovorne osebe projektanta	

2.52 STATIČNI PRERAČUN

VSEBINA

5 MALA GARAŽA

5.1 KONTROLA OBSTOJEČIH NOSILCEV
5.2 KONZOLNI NADSTREŠEK

05.1 MALE GARAŽE - KONTROLA AB NOSILCEV

OSTREŠJE	α [°]=	**12**	… naklon strehe		
	μ =	0,80	… če snegobran=> 0.8	Snegobran=	1,00
	Hnm [m]=	**310**	… nadmorska višina		
	Veter - cona	**1**	… vetrovna cona	qw[kN/m2]=	0,60
	Sneg - cona	**A2**	… sneg cone		

STALNA	PV paneli	0,25	=	0,25 kN/m^2
	kritina	0,50	=	0,50 kN/m^2
	PI plošče	2,53	=	2,53 kN/m^2
	spuščen strop	0,30	=	0,3 kN/m2
			g =	3,58 kN/m^2
	brez PI plošč		g- =	1,05 kN/m2
SNEG			μ*1,293*(1+(Hnm/728)2)=	1,22 kN/m^2
VETER			qw*c*ψo = 0.6*(0.7+0,6)/2*0,6=	0,23 kN/m^2

Manjši nosilec

Po liniji emax = 8 m

Obtežbe	s PI ploščami	brez PI plošč
g	28,64 kN/m	8,4 kN/m
qs	9,78 kN/m	9,78 kN/m
qw	1,87 kN/m	1,87 kN/m
Osnovni moment		
qd =	55,012 kn/m	27,69 kn/m
l =	2,55 m	2,55 m
Mo =	178,86 kNm	90,02 kNm

PODALJŠANJE l = 1,65

Dodatni moment	s PI ploščami		brez PI plošč
Ved =	60,8 kN		60,8 kN
l =	2,55 m		2,55 m
Mextra =	155,04 kNm		155,04 kNm
Msum =	333,90 kNm		245,06 kNm
h =	66		66
As,o =	8,57	S400	4,31
As,extra =	7,43	S400	7,43
zahtevano Astotal =	15,99	S400	11,74

Dejanska armatura		
	4fi12	4,5
	4fi22	7,6
	As,sum =	12,1

PI PLOŠČE JE POTREBNO ODSTRANITI, KONZOLNI NOSILEC SE NAMESTI NA VRHU NOSILCA

OSNOVNA STATIKA OBSTOJEČIH KONZOLNIH NOSILCEV:

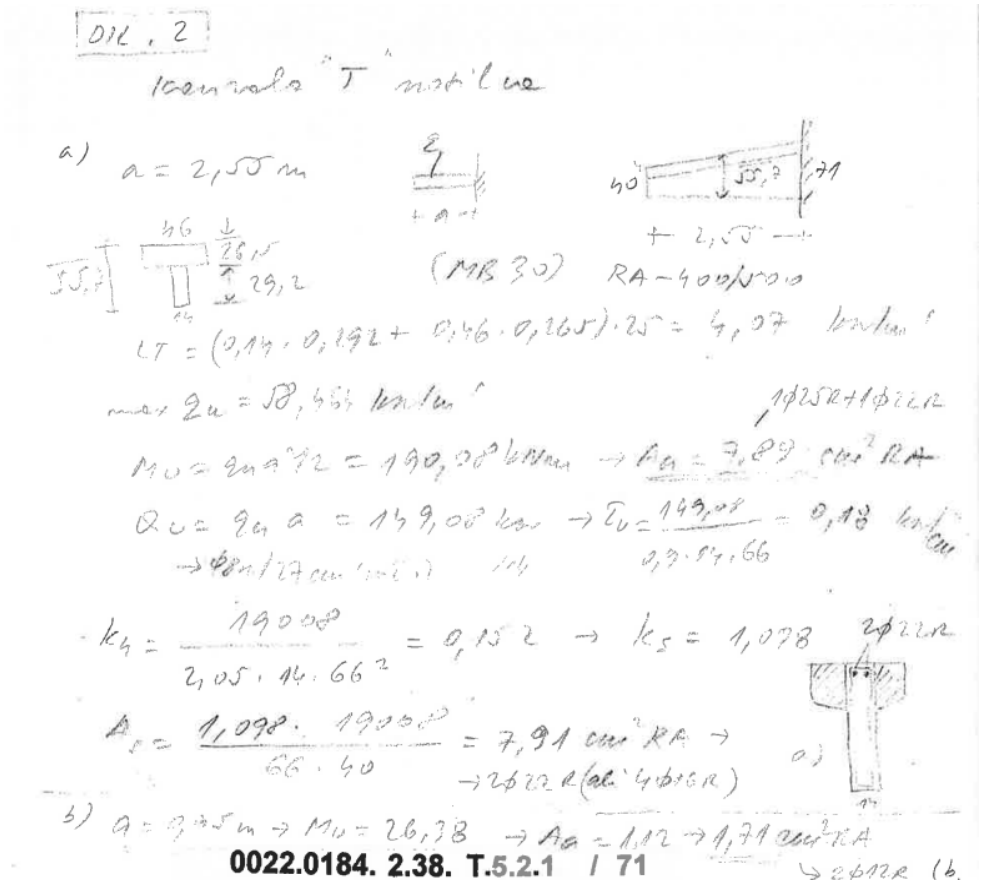

ARMATURNI NAČRTI NOSILCEV

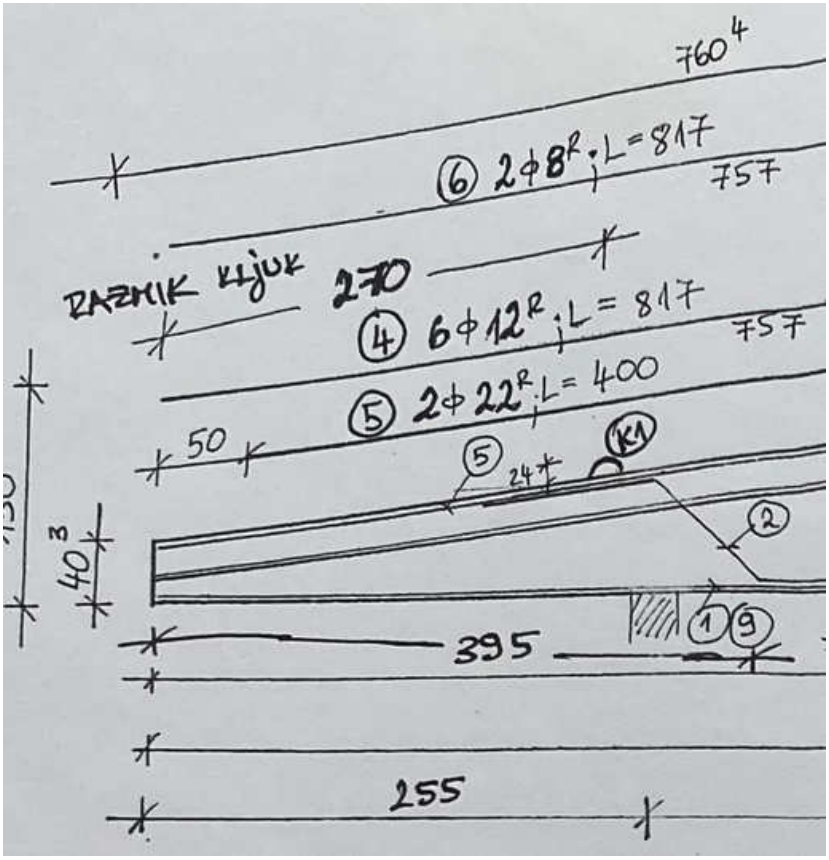

05.2 OBJEKT 5 - PRERAČUN KONZOLNIH NADSTREŠKOV

Vhodni podatki - Konstrukcija



Izometrija

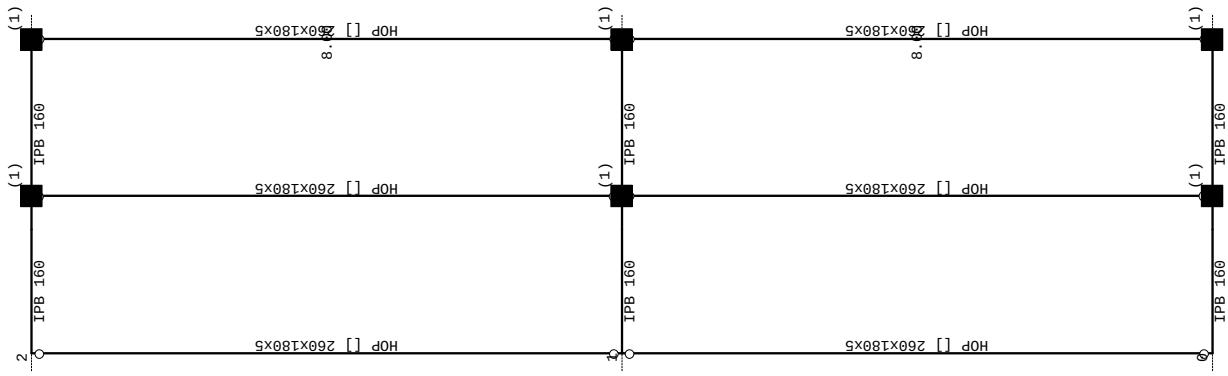

<brez imen>

Tabele materialov

No	Naziv materiala	E[kN/m2]	μ	γ[kN/m3]	αt[1/C]	Em[kN/m2]	μm
1	Jeklo	2.100e+8	0.30	78.50	1.000e-5	2.100e+8	0.30

Seti gred

Set: 1 Prerez: IPB 160, Fiktivna ekscentričnost

Mat.	A1	A2	A3	I1	I2	I3
1 - Jeklo	5.430e-3	1.764e-3	3.666e-3	3.140e-7	8.890e-6	2.490e-5

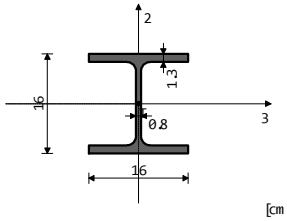

[cm]

Set: 2 Prerez: HOP [] 260x180x5, Fiktivna ekscentričnost

Mat.	A1	A2	A3	I1	I2	I3
1 - Jeklo	4.236e-3	2.600e-3	1.800e-3	4.691e-5	2.349e-5	4.121e-5

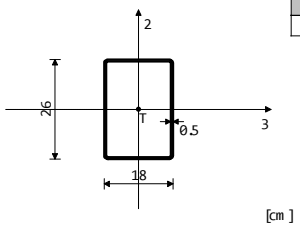

[cm]

Vhodni podatki - Obtežba

Lista obtežnih primerov

LC	Naziv	pX [kN]	pY [kN]	pZ [kN]
1	Lastna, stalna	0.00	0.00	-71.63
2	Sneg	0.00	0.00	-83.23
3	Veter	0.00	0.00	-15.69
4	Komb.: 1.35xI+1.5xII+0.9xIII	0.00	0.00	-235.67
5	Komb.: 1.35xI+0.75xII+1.5xIII	0.00	0.00	-182.66
6	Komb.: I+1.5xII+0.9xIII	0.00	0.00	-210.60
7	Komb.: I+0.75xII+1.5xIII	0.00	0.00	-157.59
8	Komb.: 1.35xI+1.5xIII	0.00	0.00	-120.24
9	Komb.: 1.35xI+1.5xII	0.00	0.00	-221.55
10	Komb.: I+1.5xIII	0.00	0.00	-95.17
11	Komb.: I+1.5xII	0.00	0.00	-196.48
12	Komb.: 1.35xI	0.00	0.00	-96.70
13	Komb.: I	0.00	0.00	-71.63
14	Komb.: I+II+0.6xIII	0.00	0.00	-164.28
15	Komb.: I+0.5xII+III	0.00	0.00	-128.94
16	Komb.: I+III	0.00	0.00	-87.32
17	Komb.: I+II	0.00	0.00	-154.86
18	Komb.: I	0.00	0.00	-71.63

Obt. 1: Lastna, stalna

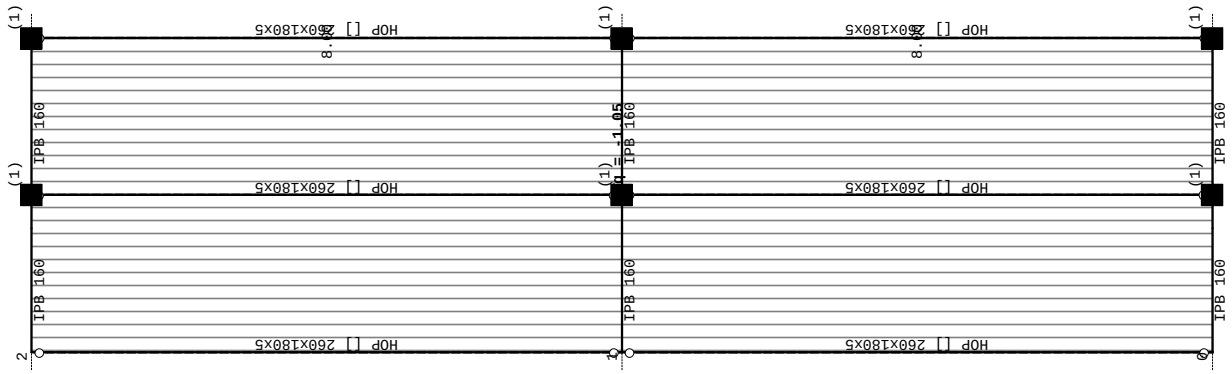

<brez imen>

Obt. 2: Sneg

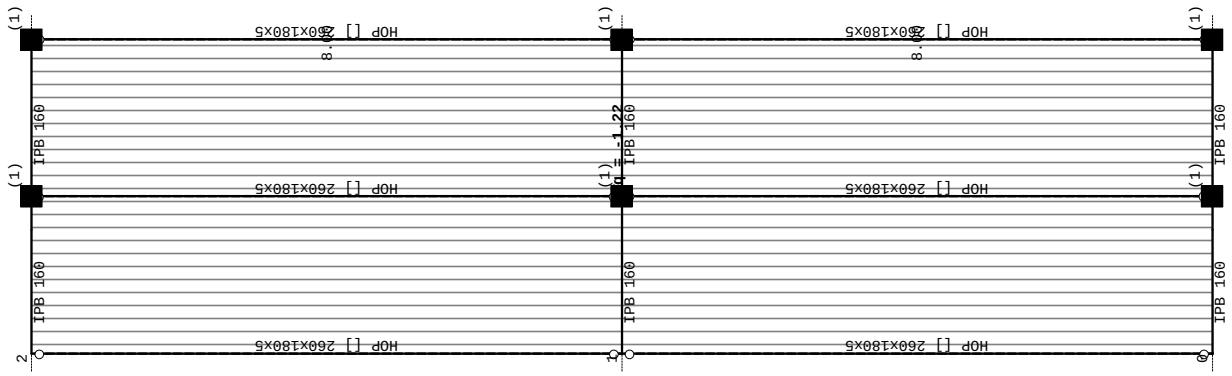

<brez imen>

Obt. 3: Veter

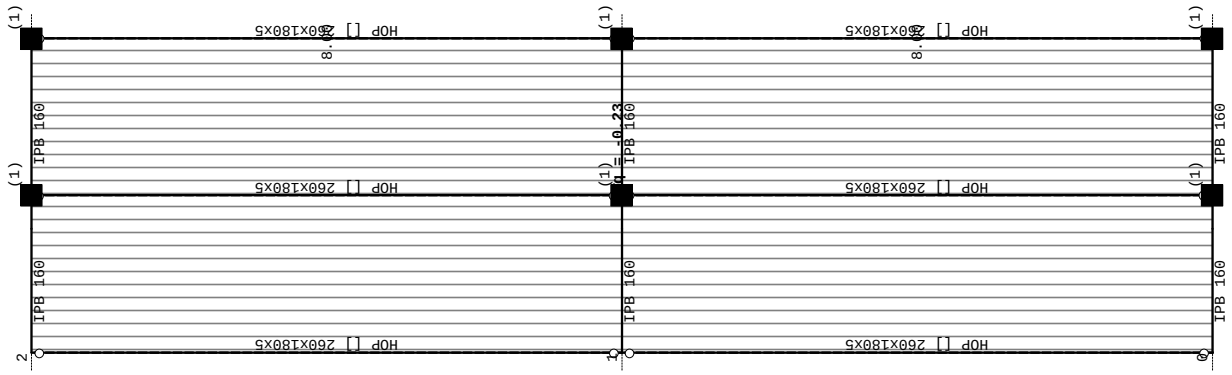

<brez imen>

Statični preračun

Obt. 20: [MSU] 14-18

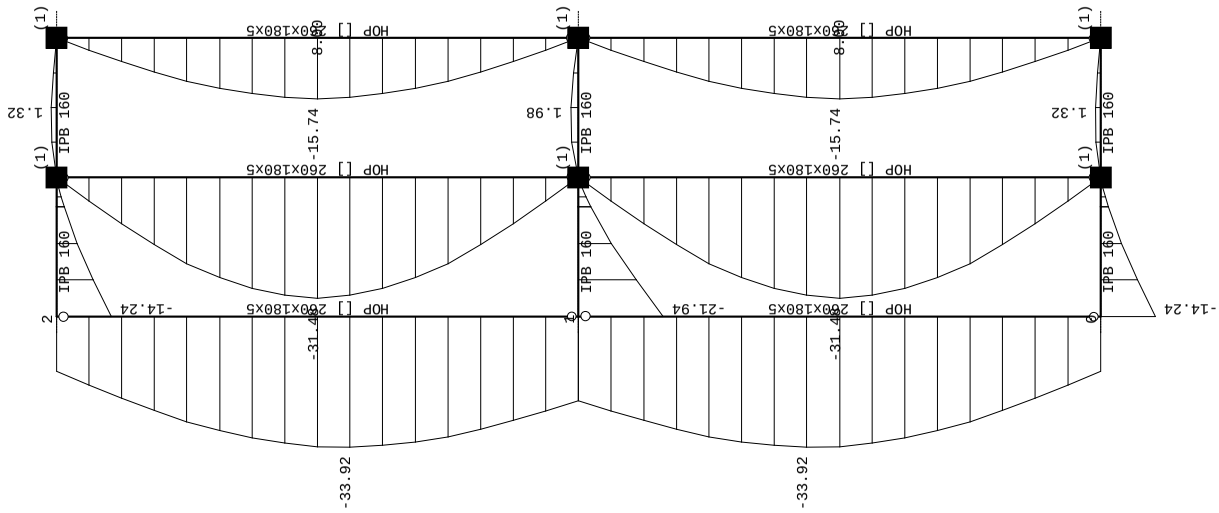

<brez imen>
Vplivi v gredi: max Zp= 1.98 / min Zp= -33.92 m / 1000

Obt. 19: [MSN] 4-13

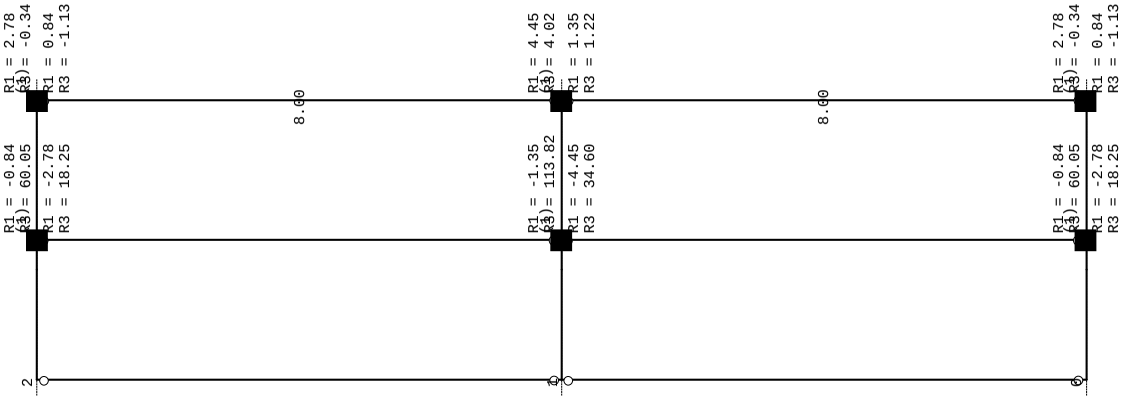

<brez imen>
Reakcije podpor (Min/Max)

Obt. 19: [MSN] 4-13

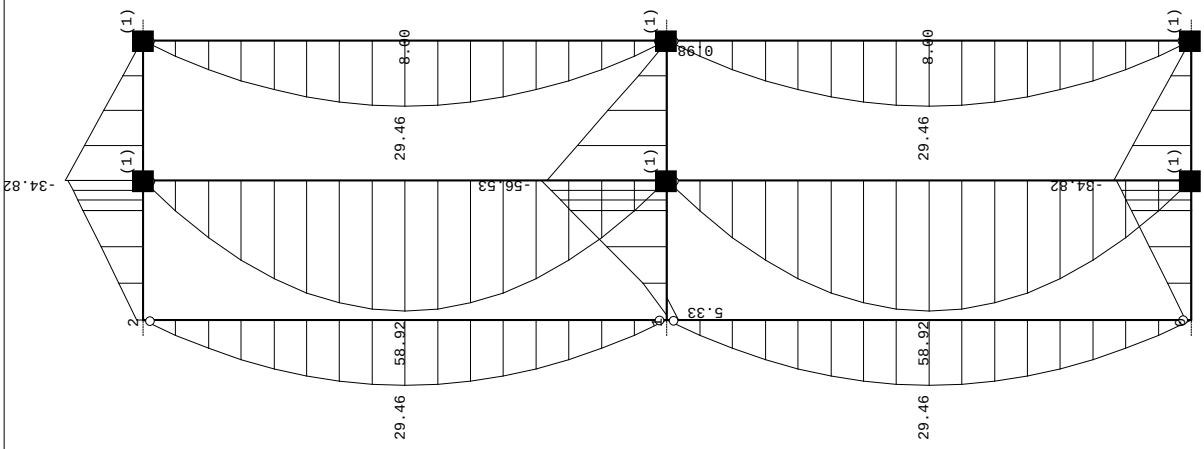

<brez imen>
Vplivi v gredi: max M3= 58.92 / min M3= -56.53 kNm

Obt. 19: [MSN] 4-13

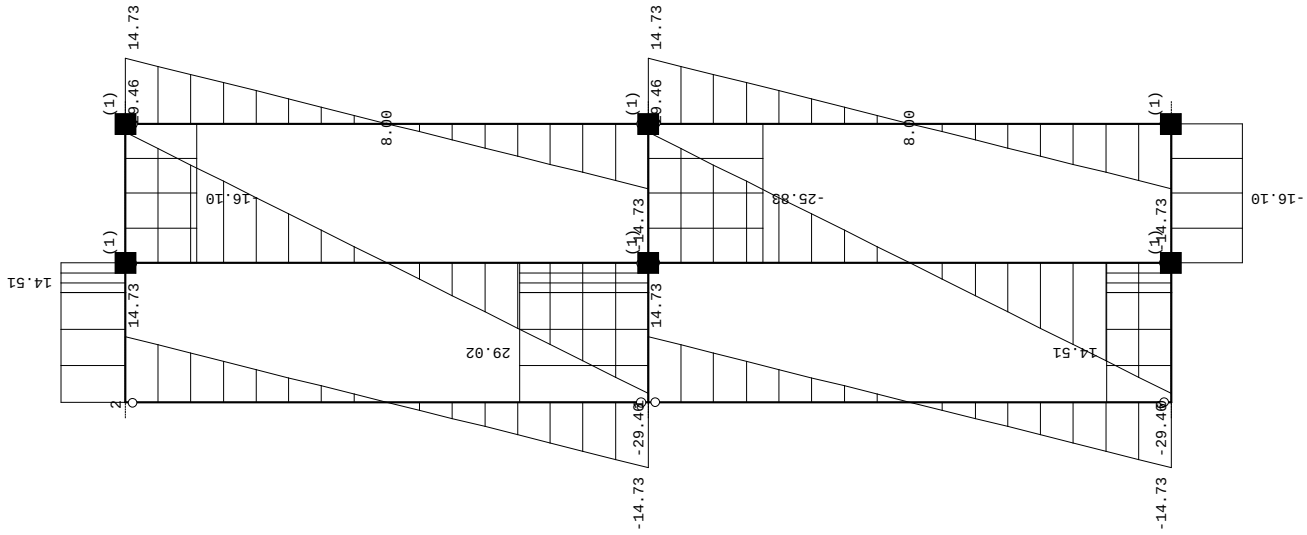

<brez imen>
Vplivi v gredi: max T2= 29.46 / min T2= -29.46 kN

Obt. 19: [MSN] 4-13

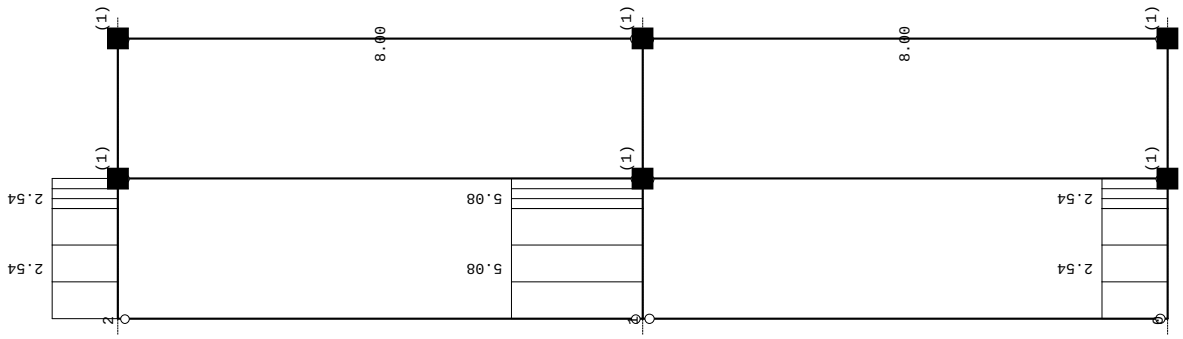

<brez imen>
Vplivi v gredi: max N1= 5.08 / min N1= 0.00 kN

Dimenzioniranje (jeklo)

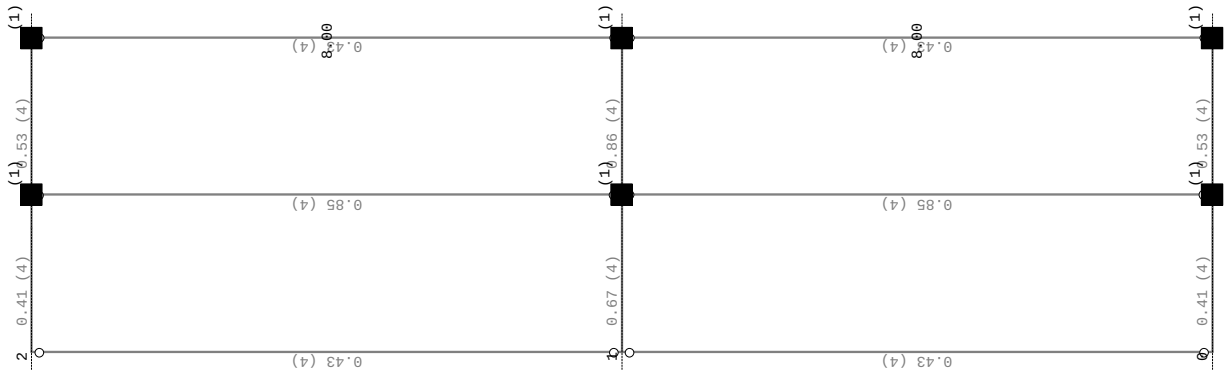

<brez imen>
Kontrola napetosti

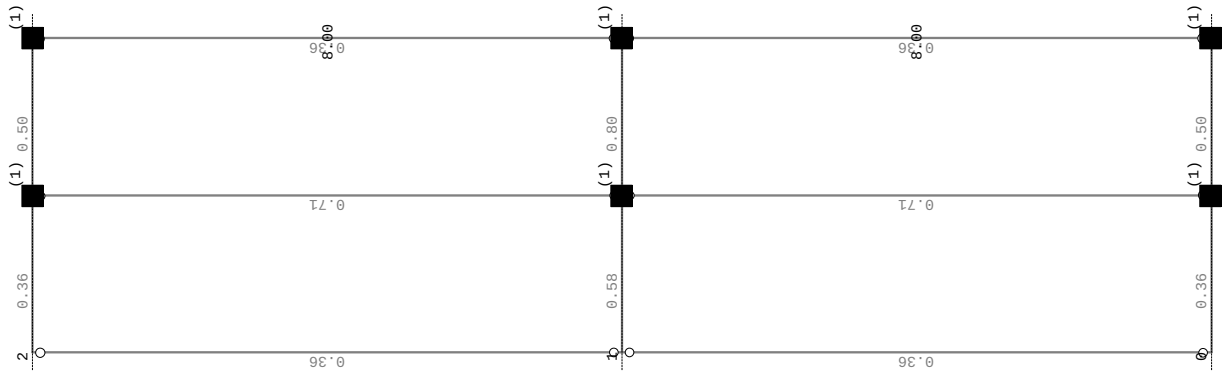

<brez imen>
Kontrola stabilnosti

PALICA 8-6
PREČNI PREREZ: IPB 160 [S 235] [Set: 1]
EUROCODE 3 (ENV)

GEOMETRIJSKE KARAKTERISTIKE prereza

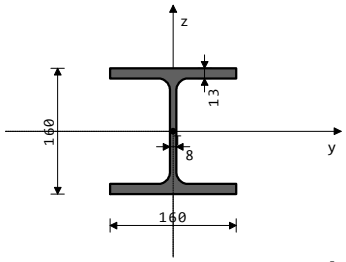

Ax =	54.300	cm2
Ay =	36.660	cm2
Az =	17.640	cm2
Ix =	31.400	cm4
Iy =	2490.0	cm4
Iz =	889.00	cm4
Wy =	311.25	cm3
Wz =	111.12	cm3
Wy,pl =	351.16	cm3
Wz,pl =	166.40	cm3
γM0 =	1.100	
γM1 =	1.100	
γM2 =	1.250	
[m m] Anet/A =	0.900	

(fy = 23.5 kN/cm2, fu = 36.0 kN/cm2)

FAKTORJI IZKORIŠČENOSTI PO KOMBINACIJAH OBTEŽB

4. γ=0.80	9. γ=0.75	6. γ=0.71
11. γ=0.66	5. γ=0.62	14. γ=0.56
7. γ=0.53	17. γ=0.52	15. γ=0.44
8. γ=0.41	12. γ=0.33	10. γ=0.32
16. γ=0.29	13. γ=0.24	18. γ=0.24

PALICA IZPOSTAVLJENA NATEGU IN UPOGIBU
(obtežni primer 4, na 45.7 cm od začetka palice)

Računska osna sila	Nsd =	5.078	kN
Prečna sila v z smeri	Vsd_z =	29.018	kN
Upogibni moment okoli y osi	Msd_y =	-56.531	kNm
Sistemska dolžina palice	L =	258.88	cm

5.3 KLASIFIKACIJA PREČNIH PREREZOV
Razred prereza 1

5.4 NOSILNOST PREČNIH PREREZOV
5.4.3 Nateg

Plast.rač.nosilnost bruto prereza	Npl.Rd =	1160.0	kN
Mejna rač.nosilnost neto prereza	Nu.Rd =	1266.7	kN
Računska nos. na nateg	Nt.Rd =	1160.0	kN

Pogoj 5.13: Nsd <= Nt.Rd (5.08 <= 1160.05)

5.4.5 Upogib y-y

Računski plastični moment	Mpl.Rd =	75.020	kNm
Računska nos.na lokalno izbočitev	Mo.Rd =	66.494	kNm
Računski elastični moment	Mel.Rd =	66.494	kNm
Računska nosilnost na upogib	Mc.Rd =	75.020	kNm

Pogoj 5.17: Msd_y <= Mc.Rd_y (56.53 <= 75.02)

5.4.6 Strig

Računska plast.nos.na strig z-z	Vpl.Rd =	217.58	kN

Pogoj 5.20: Vsd_z <= Vpl.Rd_z (29.02 <= 217.58)

5.4.9 Upogib z osno in prečno silo
Ni potrebno zmanjšanje upogibne nosilnosti
Pogoj: Vsd_z <= 50%Vpl.Rd_z

5.4.8 Upogib in osna sila

Razmerje Msd_y / Mpl.Rd_y		0.754	

Pogoj 5.36: (0.76 <= 1)

5.5 NOSILNOST ELEMENTOV
5.5.2 Bočna zvrnitev upogibnih nosilcev

Koeficient	C1 =	1.285	
Koeficient	C2 =	1.562	
Koeficient	C3 =	0.753	
Koef.ukl.dolžine za uklon	k =	1.000	
Koef.ukl.dolžine za vbočenje	kw =	1.000	
Koordinata	zg =	0.000	cm
Koordinata	zj =	0.000	cm
Razmak med bočnimi podporami	L =	258.88	cm
Sektorski vztrajnostni moment	Iw =	47943	cm6
Krit.moment bočne zvrnitve	Mcr =	427.15	kNm
Koeficient	βw =	1.000	
Koeficient imperf.	αLT =	0.210	
Brezdimenz.vitkost	λLT_ =	0.440	
Koeficient zmanjšanja	χLT =	0.942	
Računska uklonska nosilnost	Mb.Rd =	70.674	kNm

5.5.3 Upogib in nateg

Redukcijski koef.za vektorske vplive	ψvec =	0.800	
Elast.odp.mom.za krajne tlač.vlakno	Wcom =	311.25	cm3
Efektivni rač.notranji moment	Meff.sd =	56.298	kNm

Pogoj 5.50: Meff.sd <= Mb.Rd (56.30 <= 70.67)

5.6 LOKALNO IZBOČENJE ZARADI STRIGA
za strig v ravnini z-z

Višina stojine	d =	13.400	cm
Debelina stojine	tw =	0.800	cm

Ni prečnih ojačitev v sredini

Koeficient izbočenja pri strigu	kτ =	5.340	

Ni potrebna kontrola izbočenja zaradi striga
Pogoj: d / tw <= 69 ε (16.75 <= 69.00)

5.6.7 Interakcija prečne sile, upogiba in osne sile
za strig v ravnini z-z

Računski plastični moment pasnic	Mf.Rd =	71.097	kNm

Pogoji 5.66a in 5.66b so izpolnjeni

5.7 VNOS KONCENTRIRANIH SIL V STOJINO
5.7.7 Uklon pasnice v smeri stojine

Koeficient(razred pasnice 1)	k =	0.300	
Površina stojine	Aw =	12.800	cm2
Površina tlač.pasnice	Afc =	20.800	cm2

Prepročen je uklon pasnice v smeri stojine
Pogoj 5.80: (16.75 <= 210.30)

PALICA 11-7
PREČNI PREREZ: HOP [] 260x180x5 [S 235] [Set: 2]
EUROCODE 3 (ENV)

GEOMETRIJSKE KARAKTERISTIKE prereza

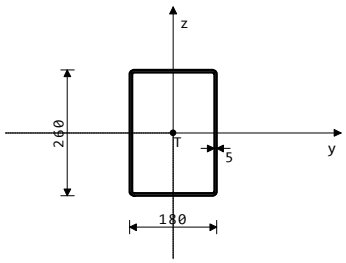

Ax =	42.360	cm2
Ay =	17.329	cm2
Az =	25.031	cm2
Ix =	4691.4	cm4
Iy =	4121.2	cm4
Iz =	2349.5	cm4
Wy =	317.02	cm3
Wz =	261.05	cm3
Wy,pl =	385.75	cm3
Wz,pl =	299.75	cm3
γM0 =	1.100	
γM1 =	1.100	
γM2 =	1.250	
[m m] Anet/A =	0.900	

(fy = 23.5 kN/cm2, fu = 36.0 kN/cm2)

FAKTORJI IZKORIŠČENOSTI PO KOMBINACIJAH OBTEŽB

4. γ=0.71	9. γ=0.67	6. γ=0.64
11. γ=0.60	5. γ=0.55	14. γ=0.50
7. γ=0.48	17. γ=0.47	15. γ=0.39
8. γ=0.36	12. γ=0.29	10. γ=0.29
16. γ=0.26	13. γ=0.22	18. γ=0.22

PALICA IZPOSTAVLJENA UPOGIBU
(obtežni primer 4, na 400.0 cm od začetka palice)

Upogibni moment okoli y osi	Msd_y =	58.918	kNm
Moment torzije	Mt =	1.224	kNm
Sistemska dolžina palice	L =	800.00	cm

5.3 KLASIFIKACIJA PREČNIH PREREZOV
Razred prereza 2

5.4 NOSILNOST PREČNIH PREREZOV
5.4.5 Upogib y-y

Računski plastični moment	Mpl.Rd =	82.410	kNm
Računska nos.na lokalno izbočitev	Mo.Rd =	67.727	kNm
Računski elastični moment	Mel.Rd =	67.727	kNm
Računska nosilnost na upogib	Mc.Rd =	82.410	kNm

Pogoj 5.17: Msd_y <= Mc.Rd_y (58.92 <= 82.41)

5.5 NOSILNOST ELEMENTOV
5.5.2 Bočna zvrnitev upogibnih nosilcev

Koeficient	C1 =	1.132	
Koeficient	C2 =	0.459	
Koeficient	C3 =	0.525	
Koef.ukl.dolžine za uklon	k =	1.000	
Koef.ukl.dolžine za vbočenje	kw =	1.000	
Koordinata	zg =	0.000	cm
Koordinata	zj =	0.000	cm
Razmak med bočnimi podporami	L =	800.00	cm
Sektorski vztrajnostni moment	Iw =	0.000	cm6
Krit.moment bočne zvrnitve	Mcr =	1922.1	kNm
Koeficient	βw =	1.000	
Koeficient imperf.	αLT =	0.210	
Brezdimenz.vitkost	λLT_ =	0.217	
Koeficient zmanjšanja	χLT =	0.996	
Računska uklonska nosilnost	Mb.Rd =	82.100	kNm

Kontrola bočne zvrnitve ni potrebna: λ_LT <= 0.4

5.7 VNOS KONCENTRIRANIH SIL V STOJINO
5.7.7 Uklon pasnice v smeri stojine

Koeficient(razred pasnice 2)	k =	0.400	
Površina stojine	Aw =	13.000	cm2
Površina tlač.pasnice	Afc =	9.000	cm2

Preprečen je uklon pasnice v smeri stojine
Pogoj 5.80: (25.00 <= 429.60)

KONTROLA STRIŽNE NOSILNOSTI
(obtežni primer 4, začetek palice)

Prečna sila v z smeri	Vsd_z =	-29.459	kN
Moment torzije	Mt =	1.224	kNm
Sistemska dolžina palice	L =	800.00	cm

5.4 NOSILNOST PREČNIH PREREZOV
5.4.6 Strig

Računska plast.nos.na strig z-z	Vpl.Rd =	308.74	kN

Pogoj 5.20: Vsd_z <= Vpl.Rd_z (29.46 <= 308.74)

5.6 LOKALNO IZBOČENJE ZARADI STRIGA
za strig v ravnini z-z

Višina stojine	d =	25.000	cm
Debelina stojine	tw =	0.500	cm

Ni prečnih ojačitev v sredini

Koeficient izbočenja pri strigu	k_τ =	5.340	

Ni potrebna kontrola izbočenja zaradi striga
Pogoj: d / tw <= 69 ε (50.00 <= 69.00)

BUILDING TRUST

SIKA® CARBODUR® CALCULATION SOFTWARE

PROJECT: 05

ELEMENT:

INDEX

1. **DESIGN CRITERIA AND REGULATIONS** 3

2. **CALCULATION ASSUMPTIONS** 3
   - **2.1. Geometry** 3
   - **2.2. Concrete** 3
   - **2.3. Reinforcing steel** 3
   - **2.4. Strength reduction factors** 3
   - **2.5. Load factors** 4

3. **FRP STRENGTH** 4
   - **3.1. Main FRP reinforcement** 4

4. **ANTICIPATED COMBINATIONS OF LOADS** 4
   - **4.1. Initial loads** 4
   - **4.2. Expected loads (strengthening design)** 4

5. **RESULTS** 4
   - **5.1. Summary of results** 4
   - **5.2. Ultimate limit states** 5
   - **5.3. Serviceability limit states** 9
   - **5.4. FRP arrangement** 10

6. **PRODUCT SPECIFICATION** 11
   - **6.1. Bonded Sika CarboDur® plates** 11
     - 6.1.1. Concrete surface preparation 11
     - 6.1.2. Sika CarboDur® plates 11
     - 6.1.3. Epoxy Adhesive 12
     - 6.1.4. Application procedure 13

7. LEGAL DISCLAIMER 14

8. ABOUT SIKA® CARBODUR® CALCULATION SOFTWARE 14

1. DESIGN CRITERIA AND REGULATIONS

Flexural FRP strengthening of beam

Concrete Society Technical Report No. 55 (TR 55): design guidance for strengthening concrete structures using fibre composite materials, Third Edition 2012.

EN 1992-1-1. Eurocode 2: Design of concrete structures - Part 1-1: General rules and rules for buildings.

Country: Slovenia

2. CALCULATION ASSUMPTIONS

2.1. Geometry

Cross section = T-Beam

Web width = 140 mm

Total height = 700 mm

Width of flange = 460 mm

Height of flange = 250 mm

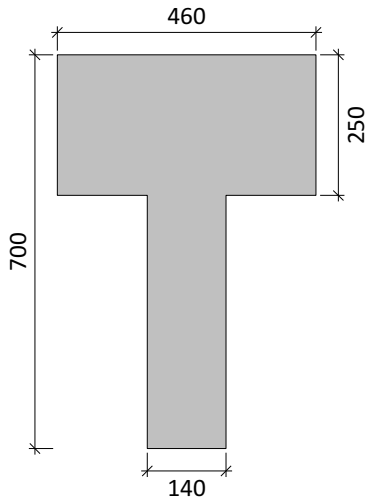

2.2. Concrete

Compressive strength of concrete

Concrete strength (f_{ck}) = 20 MPa

Cylinder specimen = 20 MPa

Cube specimen = 25 MPa

2.3. Reinforcing steel

Reinforcement layers

Top layer	d_1 mm	Steel f_{yk} (MPa)	E_s (MPa)	Number x Ø (mm)
1.	30	(B400) 400	200000	2 x 12.0
2.	30	(B400) 400	200000	2 x 22.0

2.4. Strength reduction factors

Defined by (Eurocode)

Concrete

γ_c (Persistent and transient) = 1.50

γ_c (Accidental) = 1.20

γ_c (Fire) = 1.00

α_{cc} = 1.00

Steel

γ_s (Persistent and transient) = 1.15

γ_s (Accidental) = 1.00

γ_s (Fire) = 1.00

2.5. Load factors

Default Eurocode combinations	Permanent loads	Imposed loads
Anticipated loads	1.35	1.50
FRP Reinforcement failure	1.00	0.00
Fire situation	1.00	0.00
SLS, characteristic	1.00	1.00

Category H: roofs

ψ_1 = 0.0

ψ_2 = 0.0

3. FRP STRENGTH

3.1. Main FRP reinforcement

Simply bonded. Sika CarboDur® S

Sika® CarboDur® S512	Fiber type	Strength reduction factors	ε_{fk}	E_{fk} (MPa)	t_f (mm)	Number	Width (mm)
Layer: 1	Carbon	$\gamma_{FRP,E}$: 1.10, $\gamma_{FRP,m}$: 1.05, $\gamma_{FRP,\varepsilon}$: 1.25, γ_A: 4.00	0.0176	165000.00	1.200	3	50.00

4. ANTICIPATED COMBINATIONS OF LOADS

4.1. Initial loads

(Negative) M_i : *90.00* kN·m

4.2. Expected loads (strengthening design)

Permanent loads **(Negative) M_G** : *131.00* kN·m

Imposed loads **(Negative) M_Q** : *44.00* kN·m

5. RESULTS

5.1. Summary of results

ULS Anticipated loads			
loading	M_{Ed} (kN·m)	M_{Rd} (kN·m)	$M_{Rd} \geq M_{Ed}$ ($N_{Ed} = N_{Rd}$)
$S_{Ed} = 1.35 \cdot S_G + 1.50 \cdot S_Q$	242.85	246.44	Strengthened section 246.44 kN·m ≥ 242.85 kN·m ✓

ULS Reinforcement failure			
loading	M_{Ed} (kN·m)	M_{Rd} (kN·m)	$M_{Rd} \geq M_{Ed}$ ($N_{Ed} = N_{Rd}$)
$S_{Ed} = 1.00 \cdot S_G + 0.00 \cdot S_Q$	131.00	230.07	Un-strengthened section 230.07 kN·m ≥ 131.00 kN·m ✓

Serviceability limit states	
loading	Service stresses
$S_{Ed} = 1.00 \cdot S_G + 1.00 \cdot S_Q$	$\sigma_s \leq 0.8 \cdot f_{yk}$
	297.37 MPa ≤ 320.00 MPa ✓

Fire resistance (t=0 min.)			
loading	M_{Ed} (kN·m)	M_{Rd} (kN·m)	$M_{Rd} \geq M_{Ed}$ ($N_{Ed} = N_{Rd}$)
$S_{Ed} = 1.00 \cdot S_G + 0.00 \cdot S_Q$	131.00	235.79	Un-strengthened section 235.79 kN·m ≥ 131.00 kN·m ✓

5.2. Ultimate limit states

When analysing a cross-section to determine its ultimate moment of resistance, the following assumptions should be made:

The strain distribution in the concrete in compression and the strains in the reinforcement, whether in tension or compression, are derived from the assumption that plane sections remain plane and that no longitudinal slip occurs between or within the components of the section.

The stresses in the concrete in compression are derived from the stress-strain curve in the section 3.1.7 of EN 1992-1-1.

$$\sigma_c = f_{cd} \cdot \left[1 - \left(1 - \frac{\varepsilon_c}{\varepsilon_{c2}}\right)^n\right] \quad \text{for} \quad 0 \leq \varepsilon_c \leq \varepsilon_{c2}$$

$$\sigma_c = f_{cd} \quad \text{for} \quad \varepsilon_{c2} < \varepsilon_c \leq \varepsilon_{cu2}$$

with

$$f_{cd} = \alpha_{cc} \cdot \frac{f_{ck}}{\gamma_c}$$

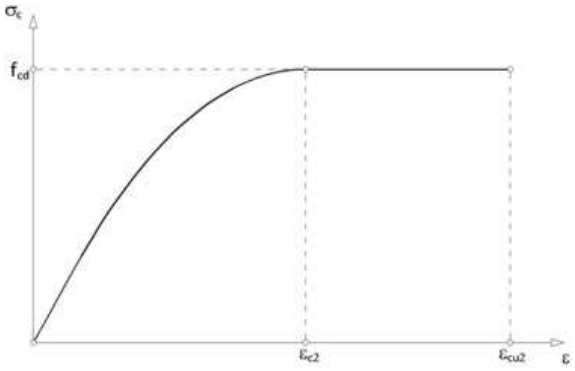

f_{cd} (MPa)	ε_{c2}	ε_{cu2}	n
13.3	0.0020	0.0035	2

The tensile strength of the concrete is ignored.

The stresses in the steel reinforcement are derived from the stress-strain curves in the section 3.2 of EN 1992-1-1.

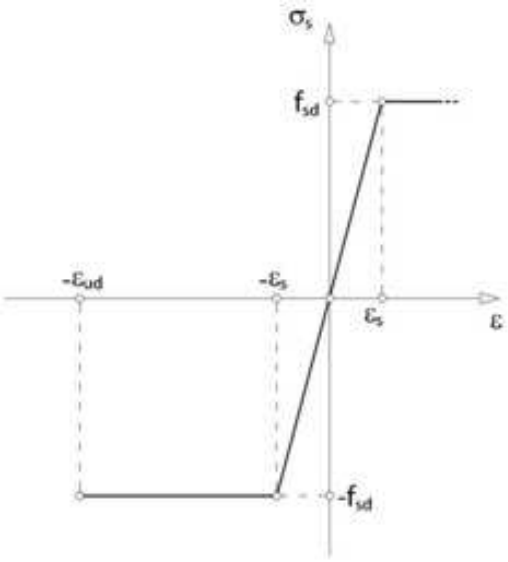

The strains in the cross-section should take into account the strains present in the existing structure at the time of application of the FRP reinforcement.

The stresses in the FRP reinforcement are derived from the assumption that the FRP has a linear elastic characteristic until rupture.

Force balance of section. Initial loads

M_i = -90.00 kN·m

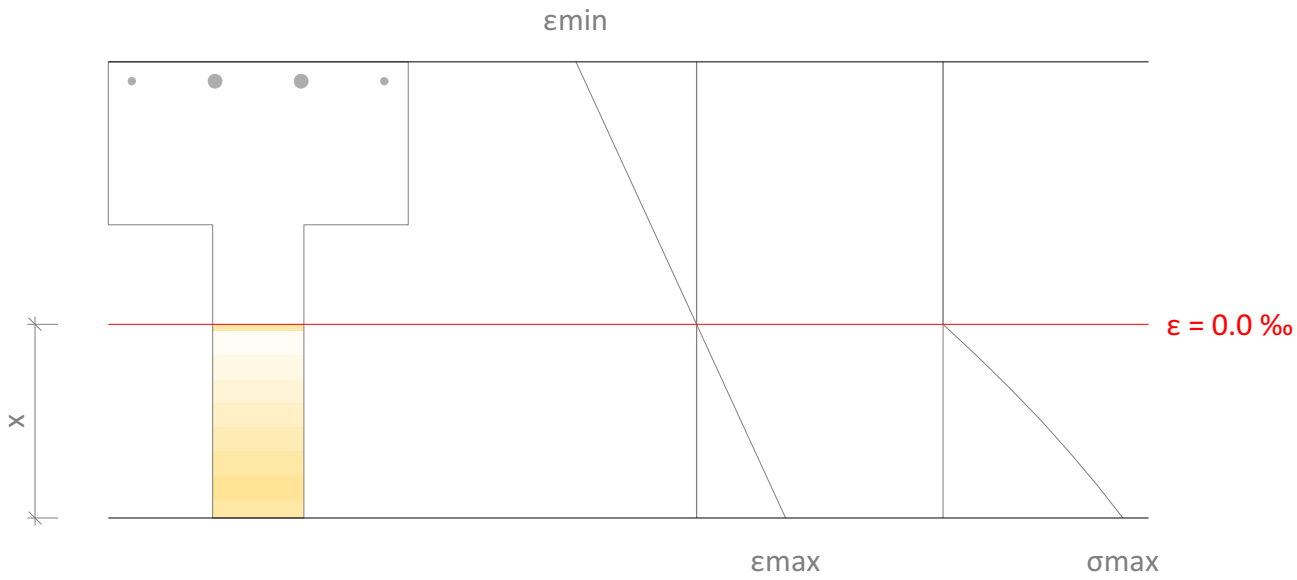

Maximum and minimum strain	ε_{max} = 0.64 ‰
	ε_{min} = -0.87 ‰
Maximum stress in concrete	f_c = 7.17 MPa
Distance from extreme compression fiber to neutral axis	x = 297.06 mm

Stress and strain of reinforcement			
Ref.	Y Coord. (mm)	f (MPa)	ε (‰)
No. 12, No. 22	320	-160.62	-0.80

FRP Reinforcement failure. Minimum combination of loads to be resisted by the un-strengthened member.

S_{Ed} = 1.00 · S_G + 0.00 · S_Q

$M_{Rd} \geq M_{Ed}$ **230.07 kN·m ≥ 131.00 kN·m** ✓

M_{Rd} : *230.07* kN·m

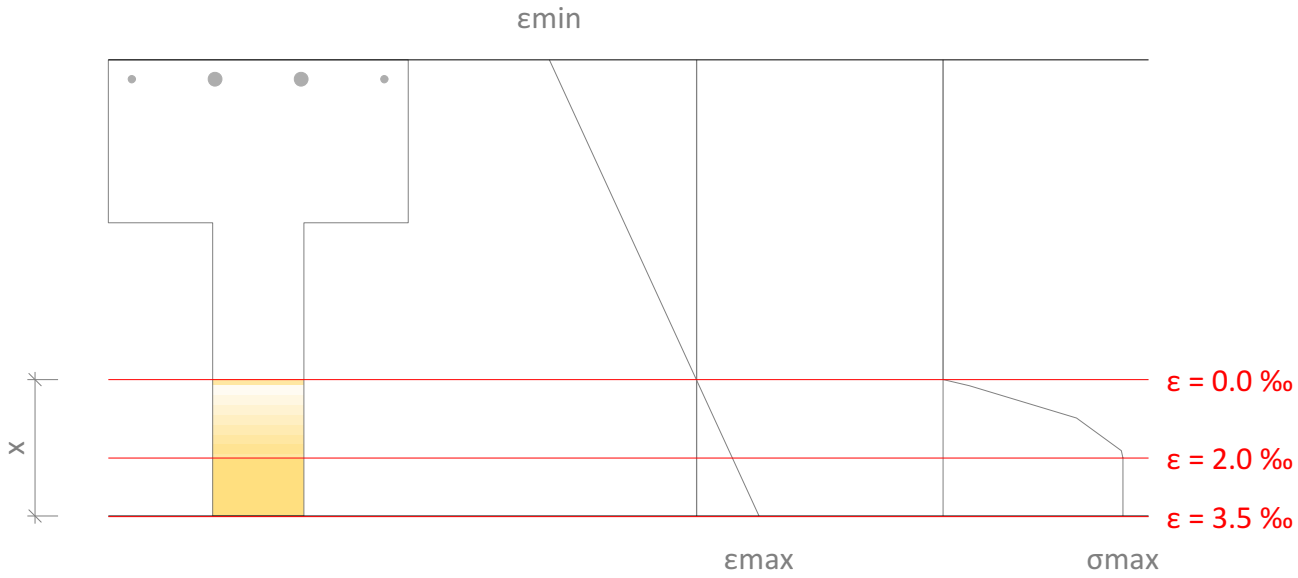

Maximum and minimum strain	ε_{max} = 3.48 ‰
	ε_{min} = -8.17 ‰
Maximum stress in concrete	f_c = 16.67 MPa
Distance from extreme compression fiber to neutral axis	x = 209.14 mm

Stress and strain of reinforcement			
Ref.	Y Coord. (mm)	f (MPa)	ε (‰)
No. 12, No. 22	320	-400.00	-7.67

Strengthened section and expected loads.

$S_{Ed} = 1.35 \cdot S_G + 1.50 \cdot S_Q$

$M_{Rd} \geq M_{Ed}$ **246.44 kN·m ≥ 242.85 kN·m** ✓

M_{Rd} : *246.44* kN·m

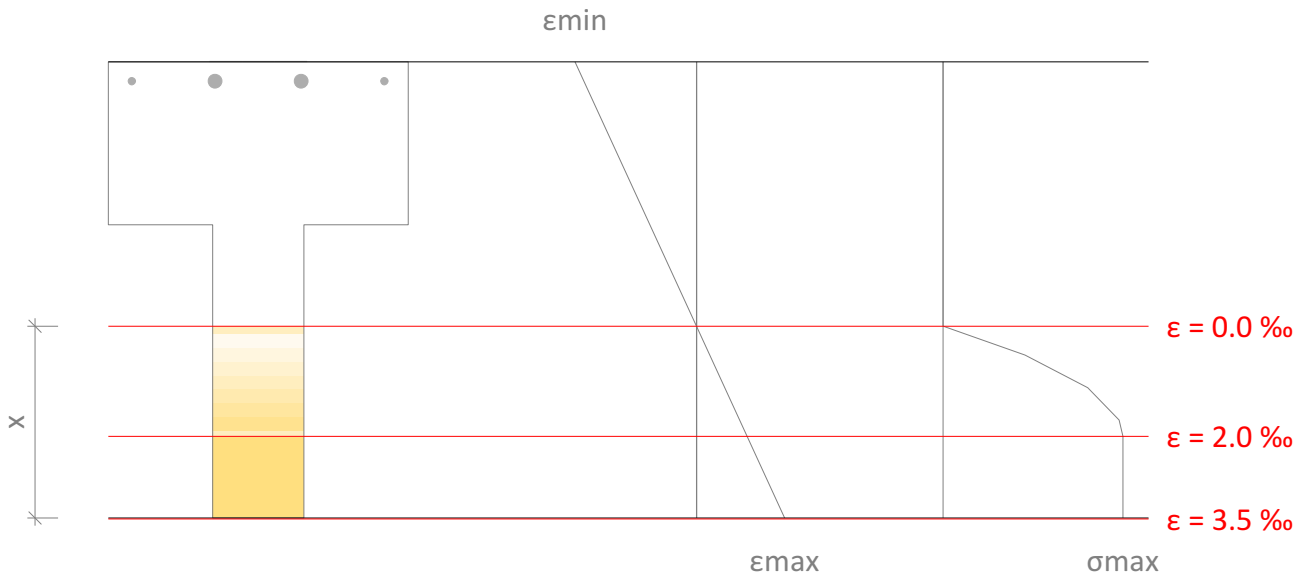

Maximum and minimum strain	ε_{max} = 3.48 ‰
	ε_{min} = -4.80 ‰
Maximum stress in concrete	f_c = 13.33 MPa
Distance from extreme compression fiber to neutral axis	x = 294.39 mm

Stress and strain of reinforcement			
Ref.	Y Coord. (mm)	f (MPa)	ε (‰)
No. 12, No. 22	320	-347.83	-4.44
FRP	351	-562.32	-3.94

Fire situation. Un-strengthened section.

$S_{Ed} = 1.00 \cdot S_G + 0.00 \cdot S_Q$

$M_{Rd} \geq M_{Ed}$ **235.79 kN·m ≥ 131.00 kN·m** ✓

M_{Rd} : *235.79* kN·m

The strength of the un-strengthened member is enough to support the combination of loads corresponding to the fire situation. The FRP strengthening is therefore not necessary during a fire situation, and does not need to be protected. If a certain fire rating is necessary, the designer must evaluate the need for a protection of the RC element (concrete and steel reinforcement) according to the local codes.

5.3. Serviceability limit states

SLS stresses in the steel reinforcement at the characteristic combination of actions should not exceed the relevant design limits in Eurocode 2, part 1-1.

Force balance of section. SLS Characteristic combination of loads

$S_{Ed} = 1.00 \cdot S_G + 1.00 \cdot S_Q$

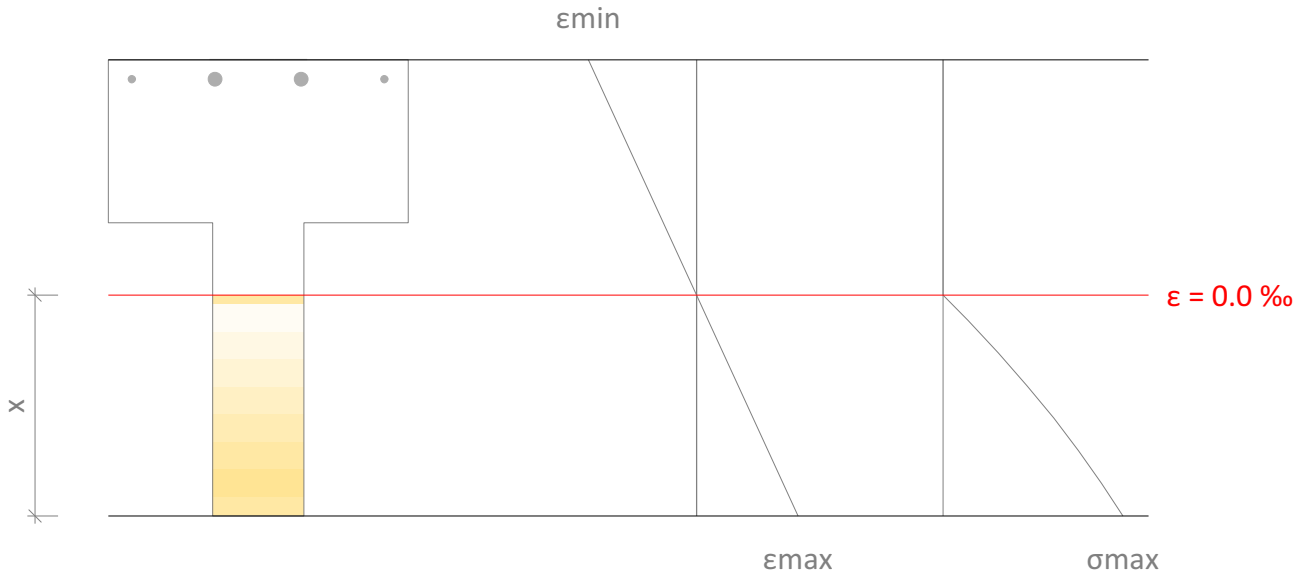

Maximum and minimum strain	ε_{max} = 1.52 ‰
	ε_{min} = -1.62 ‰
Maximum stress in concrete	f_c = 12.32 MPa
Distance from extreme compression fiber to neutral axis	x = 338.91 mm

Stress and strain of reinforcement			
Ref.	Y Coord. (mm)	f (MPa)	ε (‰)
No. 12, No. 22	320	-297.37	-1.49
FRP	351	-121.87	-0.74

In the case of significant non-static live loads during the hardening of the adhesive, the reduced adhesive strength cannot be determined according to tabulated data as indicated in TR55, 6.9.4, considering that the acting loads during that period correspond to the quasi-permanent load combination.
$\varepsilon_{fe,curing}$ = 0.000354 > 0.000200

5.4. FRP arrangement

The previous results correspond to the following FRP scheme:
FRP main reinforcement: 3 (Sika® CarboDur® S512)

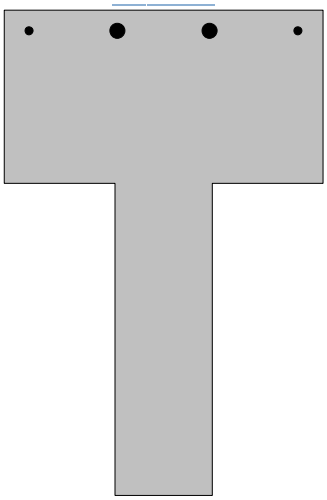

6. PRODUCT SPECIFICATION

6.1. Bonded Sika CarboDur® plates

The strengthening shall be achieved using pultruded Carbodur plates reinforced polymer laminate, externally bonded to the structure with epoxy adhesive Sikadur®-30.

The material shall be a pultruded, unidirectional CFRP plate, and exhibit a fibre volume content >68%.

The plates shall be straight, flat and free of torsion.

The material shall have a long track record (> 25 years) for structural strengthening.

Test reports regarding reaction of adhesive joint to artificial weathering after 100 days shall be provided.

6.1.1. Concrete surface preparation

Any unsound material shall be removed and removed concrete shall be repaired as described above. Large blowholes and honeycombing shall be filled with a suitable repair mortar.

Repair materials shall be fully compatible with the adhesive.

The actual strength of the concrete substrate shall be verified with at least three pull-off tests.

The concrete shall be older than 28 days.

The laitance layer on the substrate surface shall be removed and an open-textured surface shall be created.

The substrate surface shall be cleaned so that it is free from oil, grease and any other contaminants as well as loose particles and dust.

The substrate moisture content shall be less than 4% pbw.

6.1.2. Sika CarboDur® plates

The materials shall comply with the performance characteristics described as follows:

6.1.2.1. Typical Properties of Sika CarboDur® S plates:

Fibre volume content		> 68%
Glass transition temp.		> 100°C
E-Modulus	EN 2561/ASTM D3039	≈ 170000 N/mm² (MPa)
Tensile Strength	EN 2561/ASTM D3039	≈ 3100 N/mm² (MPa)
Strain at break	EN 2561/ASTM D3039	> 1.7%

6.1.3. Epoxy Adhesive

The material shall be epoxy based, and combine primer, putty and adhesive in one product.

The material shall not release substances dangerous to health, hygiene and the environment.

The material shall be long-term creep resistant proven by independent report.

The material shall meet the requirements of EN 1504-4 as structural bonding product for bonded plate reinforcement.

6.1.3.1. Typical Properties of Sikadur®-30 adhesive:

The adhesive must comply with EN 1504-4.

Density (parts A+B mixed) at +23°C	1.65 kg/l + 0.1 kg/l
Slant shear strength at steel:	50° ≥ 50 N/mm²
	60° ≥ 60 N/mm²
	70° ≥ 70 N/mm²
Bond/adhesion strength:	≥ 14 N/mm²
Shear strength:	≥ 12 N/mm²
Compressive strength:	≥ 30 N/mm²
Shrinkage / expansion:	≤ 0.1%
Workability:	85 min. at 23°C
Sensitivity to water	Pass
Modulus of elasticity:	≥ 2000 N/mm²
Coefficient of thermal expansion:	≤ 100 x 10-6
Glass transition temperature:	≥ 40°C
Durability	Pass

Compliance with FIP requirement

Sag flow	Non sag up to 3 -5 mm in vertical
Squeezability	4000 m2 at +15°C at 15 kg
Volume change	0.04%
Shear strength at 15°C	>14 N/mm²
Shear strength at 35°C	>26 N/mm²
E-modulus in compression	9600 N/mm²
E-modulus in tensile	11200 N/mm²

6.1.4. Application procedure

The plates shall be cut to length using either a rotary disc cutter or a hacksaw.

The plates shall be cleaned and degreased with Sika® Colma® Cleaner or an Isopropyl alcohol based cleaner.

The adhesive shall be applied to the plates in a way that it is approximately 1 mm thick on the sides and 2 mm thick in the middle of the plate.

A very thin layer of the adhesive shall be applied to the prepared substrate surface to fill any small voids and irregularities.

The plate shall be placed on the prepared area and pressed onto the substrate, first gently by hand and second with a hard rubber roller, until adhesive material is squeezed out on both sides of the plate. The excess material shall be removed.

In case of plate intersections, the surface of the underlying plate shall be cleaned from dirt and grease and an adhesive ramp shall be applied on both sides of the underlying plate so the top plate is connected to the substrate on the entire area.

The freshly bonded system shall not be disturbed for at least 24 hours and any vibrations shall be kept at a minimum during the curing period of the adhesive.

If necessary, the applied system shall be protected with a suitable coating (compatibility tests between the coating and the laminate shall be available).

7. LEGAL DISCLAIMER

THIS SOFTWARE APPLICATION AND THE RESULTS DERIVED FROM ITS UTILIZATION ARE INTENDED ONLY FOR USE BY PROFESSIONAL USERS WITH EXPERT KNOWLEDGE IN THE AREA OF THE INTENDED APPLICATION. USERS MUST INDEPENDENTLY VERIFY THE RESULTS BEFORE ANY USE AND TAKE INTO ACCOUNT THE SITE AND APPLICATION CONDITIONS, PRODUCT DATA SHEET AND PRODUCT LITERATURE, TECHNICAL STATE OF THE ART AS WELL AS LOCAL APPLICABLE STANDARDS AND REGULATIONS.

With respect to the software application and results derived from its use, SIKA MAKES NO WARRANTIES OF ACCURACY, RELIABILITY, COMPLETENESS, MERCHANTABILITY OR FITNESS FOR ANY PURPOSE. THE SOFTWARE APPLICATION IS PROVIDED ON AN "AS-IS" BASIS AND SIKA EXPRESSLY DISCLAIMS ANY WARRANTIES WITH RESPECT TO THE SOFTWARE APPLICATION AND RESULTS DERIVED FROM ITS USE.

Sika shall not be liable for any consequential, punitive, incidental, exemplary, or special damages (including but not limited to loss of business opportunity or loss of profit) arising out of the evaluation or use of the software application and results derived from its use.

The information, and, in particular, the recommendations relating to the application and end-use of Sika products, are given in good faith based on Sika's current knowledge and experience of the products when properly stored, handled and applied under normal conditions in accordance with Sika's recommendations. In practice, the differences in materials, substrates and actual site conditions are such that no warranty in respect of merchantability or of fitness for a particular purpose, nor any liability arising out of any legal relationship whatsoever, can be inferred either from this information, or from any written recommendations, or from any other advice offered. The user of the product must test the product's suitability for the intended application and purpose. Sika reserves the right to change the properties of its products. The proprietary rights of third parties must be observed. All orders are accepted subject to our current terms of sale and delivery. Users must always refer to the most recent issue of the local Product Data Sheet for the product concerned, copies of which will be supplied on request.

Except as indicated otherwise, all information, text, graphic images, features, functions, and layout contained in this software are the exclusive property of Sika and may not be copied or distributed, in whole or in part, without the Company's express written consent.

By transmitting information to Sika, you grant to the Company the unrestricted irrevocable license to use, reproduce, display, modify, distribute and perform such information. Personal identity information is used by Sika only to process a request for information by you or for marketing our products and services.

© Copyright Sika Services AG 2016

8. ABOUT SIKA® CARBODUR® CALCULATION SOFTWARE

Engineered by:

Cype Software - Eusebio Sempere, 5 - 03003 Alicante (Spain)

www.cype.com